EC890

DEDICA DUO

COFFEE MAKER

Instruction for use



DēLonghi

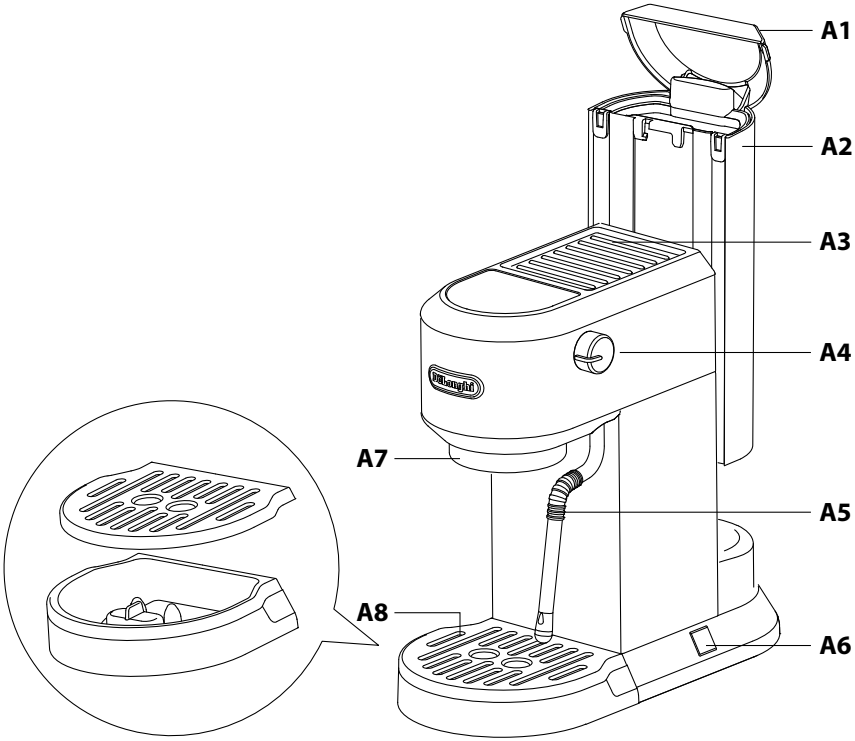
A1
A2
A3
A4
A7
A5
A8
A6

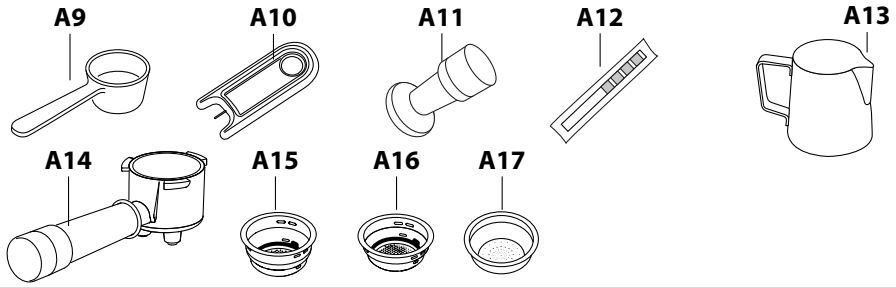
A9
A10
A11
A12
A13
A14
A15
A16
A17

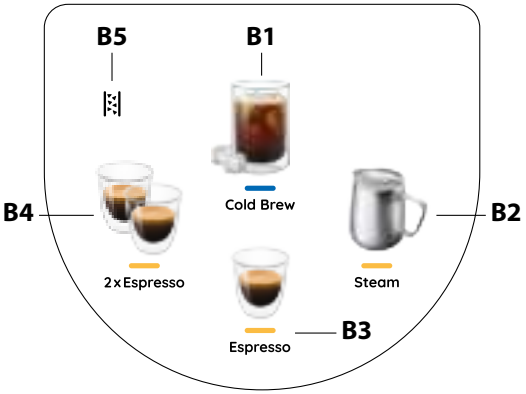
B5
B1
Cold Brew
B4
B2
2 x Espresso
Steam
Espresso
B3

Before using the appliance, always read the safety warnings.

1. DESCRIPTION OF APPLIANCE

A1. Water tank lid
A2. Water tank
A3. Cup warmer
A4. Steam knob
A5. Hot water/steam wand
A6. On/Off switch
A7. Brew unit
A8. Drip tray
A9. Spoon
A10. Cleaning needle
A11. Tamper
A12. Water hardness test indicator paper
A13. Milk jug (only on some models)
A14. Portafilter
A15. 2 cups filter
A16. 1 cup filter
A17. Pod coffee filter (not included)

1.1 Control panel

B1. Cold brew icon with indicator light
B2. Steam icon with indicator light
B3. Espresso icon with indicator light
B4. 2 x Espresso icon with indicator light
B5. Descale indicator light

Please note: The accessories may vary in type and number depending on the model.
Optional cleaning accessories recommended by the manufacturer: for more information, visit www.delonghi.com.

2. FIRST USE

Before using the coffee maker, the internal circuits of the appliance must be rinsed. Proceed as follows:

- Wash and dry with warm water (40-50°C) the water tank (A1+A2), portafilter (A14), 1 cup filter (A15), 2 cups filter (A16), cleaning needle (A10);
- Wash for at least 30 minutes with warm (40-50°C) and soap the drip tray (A8), the spoon (A9) and the milk jug (A13);
- Clean the tamper (A11) with a cloth;
- Remove the water tank by pulling it upwards (fig. 1).

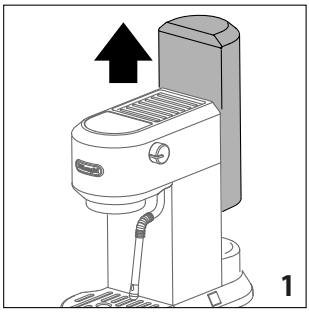

- Open the water tank lid (A1) and fill the water tank (A2) with fresh potable water, taking care not to exceed the MAX level (fig. 2).

Please Note: Fresh potable water is mandatory. Do not use sparkling (carbonated) or distilled water.

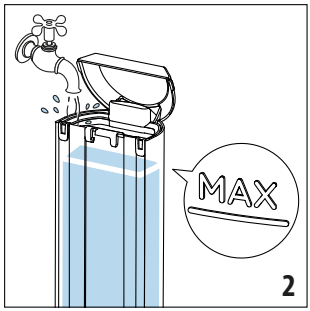

Please note: Never operate the appliance without water in the water tank or without the tank.

- Put the water tank back in the appliance, pressing lightly to open the valves located on the bottom of the tank.
- Connect the appliance to a mains socket. Turn the appliance on by pressing the On/Off switch (A6) (fig. 3).

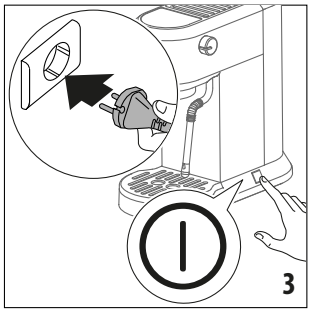

- The Cold brew (B1), Steam (B2), Espresso (B3) and 2 x Espresso (B4) indicator lights blink (sequential blinking).
- When the Steam indicator light (B2) remain on steadily, the appliance is ready to perform a rinse cycle.
- Place a container with a minimum capacity of 500 ml un-

der the hot water/steam wand (A5).

- Turn the steam knob (A4) to position (fig. 4).



- The steam indicator light (B2) blinks and the appliance perform a rinse cycle. Throw away the water after the operation. This is to purge the steam circuit before frothing or steaming your milk.
- Wait until Espresso (B3) and 2 x Espresso (B4) indicator lights blink, then turn the steam knob (A4) to "○" position.
- Empty the container. Cold brew (B1) indicator light remains on steadily, while the Espresso (B3), 2x Espresso (B4) and Steam (B2) indicator lights blink.
- Attach the portafilter (A14) to the appliance aligning the portafilter handle with "INSERT", then turning the handle to the right until it is aligned in the "CLOSE" position (fig. 5).

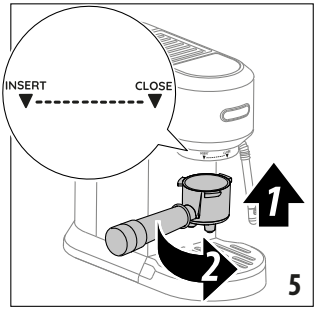

- Place a container under the portafilter (A14).
- When the Espresso (B3), 2 x Espresso (B4) and Steam (B2) indicator lights stop blinking and all the indicator lights on the control panel (except B5) remain on steadily, press 2 x Espresso icon (B4). The appliance delivers water from the portafilter. Repeat this operation 5 times.
- Fill the water tank with fresh potable water.
  The appliance is ready for use.

3. MAKING ESPRESSO

Please Note: Every three days, empty out the water tank (A2), rinse thoroughly and refill with fresh potable water.

- Turn the appliance on by pressing the On/Off switch (A6). If the appliance is in stand-by mode, press any icons (B1, B2, B3 or B4) on the control panel.
- When all the indicator lights on the control panel (except B5) remain on steadily, the appliance is ready for use.

Barista tips: we recommend to warm up the cup/cups before making the espresso by attaching the portafilter (A14) to the appliance with the cup filter (A15 or A16) in place but without adding ground coffee, using the same cup/cups as will later be used to make the espresso, press the Espresso (B3) icon and deliver hot water into the cup/cups to heat it. This will also rinse the coffee spouts and stabilize the temperature before the extraction.

- Place the 2 cups filter (A15) or 1 cup filter (A16) in the portafilter (A14) (fig. 6).

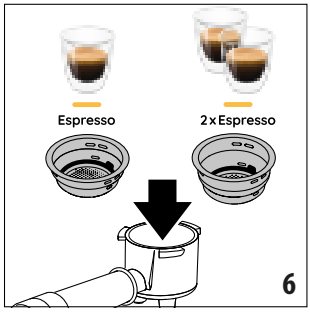

- Before filling the filter with ground coffee, make sure there are no coffee residues left in the filter from the last time you made coffee.
  Fill the selected filter with ground coffee using the spoon (A9). Make sure that you are using a fine grind, specific for espresso.
- Tap the portafilter several times to distribute the coffee evenly in the filter.
- Press down firmly with the tamper (A11). Make sure the coffee is at the recommended dose level after tamping (fig. 7).

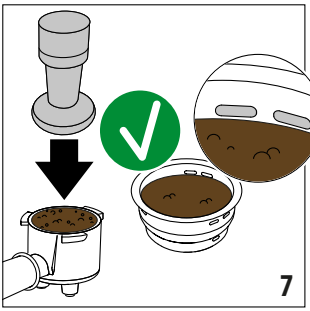

You may need to add some coffee. Tamping correctly the ground coffee is essential to obtain a good espresso. If you press too firmly, the coffee will be delivered slowly and will be strong. If you press too lightly, the coffee will be deliv-

ered quickly and will be weak.

- Remove any excess coffee from the rim of the portafilter and attach the portafilter to the appliance (fig. 5).
- Place one cup or two cups on the drip tray (A8) under the portafilter spouts.
- Press Espresso (B3) or 2 x Espresso (B4) icon. The appliance proceeds to make the coffee and delivery stops automatically. While the appliance is making coffee, delivery can be interrupted at any moment by pressing the coffee icon pressed previously.
- To remove the portafilter, turn the handle from right to left. To avoid splashes, never remove the portafilter while the appliance is delivering coffee. Always wait for a few seconds after delivery.

Please note: The water temperature is controlled during the entire preparation process to ensure its stability during the extraction step. The appliance has 3 infusion temperatures.
The temperature effectively utilized will depend typically on the variety of beans and the roast: Robusta beans require a lower temperature, and Arabica beans a higher temperature. The same applies for dark roasted beans which require lower temperatures and for light roasted beans which require higher brewing temperatures respectively (see the menù setting to change the temperature).
At the end of delivery, the indicator light of the previously pressed icon blinks for 5 seconds. To increase the amount of coffee in the cup, press the coffee icon pressed previously for the desired time within 5 seconds.

3.1 How to make espresso coffee using ESE Pods

- Place the pod coffee filter (A17) (not included, available for purchase at delonghi.com) in the portafilter (A14).
- Insert the pod in the filter, centering it as much as possible. Always follow the instructions on the pod pack to position the pod on the filter correctly.
- Attach the portafilter to the appliance (fig. 5).
- Place the cup under the portafilter spouts.
- Press Espresso (B3) icon.
- The appliance proceeds to make the coffee and delivery stops automatically.
- To remove the portafilter, turn the handle from right to left.

4. MAKING MILK OR PLANT BASED MILK BEVERAGES

- Turn the appliance on by pressing the On/Off switch (A6). If the appliance is in stand-by mode, press any icons (B1, B2, B3 or B4) on the control panel.
- When all the indicator lights on the control panel (except B5) remain on steadily, the appliance is ready for use.
- To use tall cups or glasses, remove the drip tray (A8) and stand the glasses on tray (fig. 8).

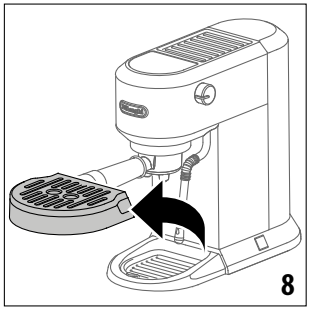

- Prepare the espresso coffee as described in the previous sections, using sufficiently large cups.
- Fill a jug (A13) with fresh cold milk or plant based milk alternatives. Milk will up to triple in volume. For a denser more even froth, you must use milk at refrigerator temperature (about 5°C).

Please note: The use of fresh cold milk from the refrigerator (4- 6°C) is mandatory. Always place the jug in the fridge when not in use.

- Press the Steam icon (B2). The Steam indicator light blinks. When the indicator light comes steady, the appliance is ready to deliver steam.
  When steam is ready, before frothing milk, position an empty container under the hot water/steam wand (A5) and turn the steam knob (A4) to position for a few seconds to eliminate any air left in the circuit. Turn the steam knob (A4) to "○" position and proceed.
- Place the jug under the hot water/steam wand (A5).
- Turn the steam knob (A4) to position; the appliance proceeds to make the froth (fig. 9).

Please note: You should not deliver steam for more than 60 seconds.

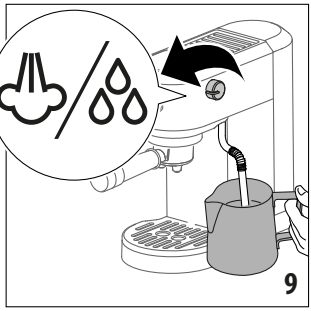

Please note: Make sure to turn the steam knob completely.

	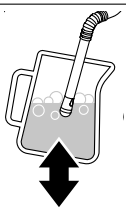	
To froth the milk, rest the hot water/steam wand on the surface of the liquid. This mixes air with the milk and steam.	Keep the hot water/steam wand in contact with the surface, taking care not to let in too much air and create excessively large bubbles.	Immerse the hot water/steam wand below the surface of the milk, this creates a vortex in the liquid.

- Once the milk is heated to the desired temperature (ideally 60°C) and desired cream density have been reached, turn the steam knob (A4) to "○" position.
- Wait till steam stops completely before removing the milk jug.
- Pour the frothed milk into the cups containing the espresso coffee prepared previously. The cappuccino is ready.

4.1 Cleaning the hot water/steam wand (A5)

- Wait that the hot water/steam wand cool down. After every use, remove with a soft damp cloth any milk residues from the hot water/steam wand. For perfect cleaning, we recommend Eco MultiClean: it ensures hygiene by removing milk proteins and fats and can be used to clean the whole machine.
- Use some steam for a deeper cleaning: turn the steam knob (A4) to position for 5-10 seconds and then close to "○" position.
- To maintain the better usability of the steam wand, we suggest to use the cleaning needle (A10) for opening the hole of the nozzle (fig 12).

Barista tips: Whole milk is recommended. The appearance and texture of froth depending on the nature of the dairy milk or plant based milk alternative utilized.

Recommended quantity for each cappuccino: 100/150 ml.

After frothing the milk, eliminate unwanted bubbles by swirling the jug gently.

Please note: To prepare more than one cappuccino, first make all the coffees then at the end prepare the frothed milk for all the cappuccinos.

To exit the steam function, turn the steam knob (A4) to "○" position and press any icons; in this case, the Espresso (B3) and 2 x Espresso (B4) indicator lights blink to indicate that the steam knob must be closed again ("○" position).

5. MAKING COLD BREW

Please note: before making cold brewed drinks, empty out the water tank (A2), rinse thoroughly and refill with fresh potable water.

- Turn the appliance on by pressing the On/Off switch (A6). If the appliance is in stand-by mode, press any icons (B1, B2, B3 or B4) on the control panel.
- To use tall cup or glass, remove the drip tray (A8) and place the glass on tray.
- Add a few ice cube to the glass.
- Place the 2 cups filter (A15) in the portafilter (A14) (fig. 8) (1 cup filter can be used changing the length of beverage).
- Fill the cup filter with ground coffee using the spoon (A9) (see "Making espresso" paragraph) and attach the portafilter to the appliance (fig. 5).
- Place the glass under the portafilter spouts (fig. 10).

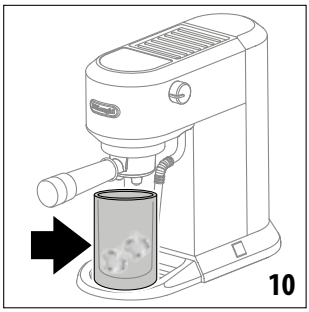

- Press Cold brew (B1) and wait until delivery stops automatically (about 5 minutes).
- The Cold brew is ready.

6. PROGRAMMING THE QUANTITIES OF COFFEE IN THE CUP

The appliance is set by default to automatically deliver standard quantities. To change these quantities, proceed as follows:

- Press the Espresso (B3), 2 x Espresso (B4) or Cold brew (B1) icons and hold for a least 10 seconds, until the indicator light relative to the selected drink starts to blinks, indicating that the appliance is in programming mode; the appliance emits a acoustic signal (beep).
- The coffee maker starts delivering coffee.
- When the desired quantity has been reached, press the Espresso (B3), 2 x Espresso (B4) or Cold brew (B1) icons again: the quantity is programmed.

	Default quantity	Programmable quantity
 Espresso	35 ml	from ≃ 15 ml to ≃ 90 ml
 2 x Espresso	70 ml	from ≃ 30 ml to ≃ 180 ml
 Cold Brew	150 ml	from ≃ 80 ml to ≃ 180 ml

To return to the quantities of default see instructions in section Default values.

7. MAKING HOT WATER

- Turn the appliance on by pressing the On/Off switch (A6). If the appliance is in stand-by mode, press any icons (B1, B2, B3 or B4) on the control panel.
- When all the indicator lights on the control panel (except B5) remain on steadily, the appliance is ready for use.
- To use tall cups or glasses, remove the drip tray (A8) and stand the glasses on tray.
- Place the glass under the hot water/steam wand (A5).
- Turn the steam knob (A4) to position. Hot water is delivered from the hot water/steam wand.
- To exit the hot water function, turn the steam knob (A4) to "○" position or press any icons; in this case, the Espresso (B3) and 2 x Espresso (B4) indicator lights blink to indicate that the steam knob must be closed again ("○" position).

Please note: You should not deliver hot water for more than 60 seconds.

8. MENÙ SETTINGS

- Access the menu: to enter the settings menu, press the Steam (B2) and 2 x Espresso (B4) icons and hold for a least 10 seconds, until the Espresso (B3), 2 x Espresso (B4) and Steam (B2) indicator lights starts to blinks and Cold brew (B1) indicator light remain on steadily.
- Select the setting to be adjusted:

Corresponding setting	Press to select the setting	Press to change the setting
Brewing temperature	 Espresso	 2 x Espresso — to select LOW temperature
		 Espresso — to select MEDIUM temperature
		 Steam — to select HIGH temperature
Water hardness	 2 x Espresso	 2 x Espresso — to select LOW hardness
		 Espresso — to select MEDIUM hardness
		 Steam — to select HIGH hardness
Auto-off	 Steam	 2 x Espresso — to select 5 minutes
		 Espresso — to select 90 minutes
		 Steam — to select 3 hours

- Exit the menu: after 15 seconds of inactivity, the machine automatically exits the settings menu and is ready for use.

Please note: Indicator light remain on steadily indicates the currently setting, indicator light blinks indicate the available settings.

8.1 Default values

- To enter the settings menu, press the Steam (B2) and 2 x Espresso (B4) icons and hold for a least 10 seconds.
- Press Cold brew (B1) icon.
- Press 2 x Espresso (B4) icon.
- Espresso (B3), 2 x Espresso (B4) and Steam (B2) indicator

lights starts to blinks simultaneously to confirm that the original settings have been restored.
- When all the indicator lights on the control panel (except B5) remain on steadily, the appliance is ready for use.

8.2 User statistics

- To enter the settings menu, press the Steam (B2) and 2 x Espresso (B4) icons and hold for a least 10 seconds.
- Press Cold brew (B1) icon.
- Press Espresso (B3) icon.
- All the indicator lights on the control panel (except B5) blink.
- Bring up the required statistical data by pressing one of the four icons as illustrated in the following table:

Icons	Data
 Espresso	Total count of Espresso (single and double)
 2 x Espresso	Total count of descale cycles
 Steam	Total count of hot water/steam
 Cold Brew	Total count of Cold brew

- A indicator light remains on for 5 seconds to indicate the number of operations according to the following table:

Indicator light	Number of operations
Steam	100-999
Espresso	1000-2999
2 x Espresso	3000-5999
Cold Brew	6000-10999
	>11000

8.3 Acoustic signal enable/disable

- To enter the settings menu, press the Steam (B2) and 2 x Espresso (B4) icons and hold for a least 10 seconds.
- Press Cold brew (B1) icon.
- Press Steam (B2) icon.
- Press Espresso (B3) icon to enable the acoustic signal and 2 x Espresso (B4) icon to disable.

8.4 Measuring water hardness

The (B5) indicator light comes on to require descaling following a predetermined period of operation that depends on a water hardness setting. The appliance can also be programmed according to the actual hardness of the local water supply, in which case descaling may be required less frequently.

- Remove the water hardness test indicator paper (A12) from its pack.
- Immerse the paper completely in a glass of water for one second.
- Remove the paper from the water and shake lightly. After about a minute, 1, 2, 3, or 4 red squares form, depending on the hardness of the water:

Water Hardness Test Result	Level
■	1 soft water
■■	2 medium water
■■■ ■■■■	3 hard or very hard water

9. CLEANING

Important: While cleaning, never immerse the coffee maker in water. It is an electrical appliance. Before maintenance or cleaning of the appliance, turn it off, unplug from the main socket and allow to cool.

Do not use solvents, abrasive detergents or alcohol to clean the coffee appliance.

None of the components or accessories is dishwasher safe.

Do not use metal objects to remove encrustations or coffee deposits as they could scratch metal or plastic surfaces.

If the appliance is not used for more than one week, before using it again, we strongly recommend you perform a rinse cycle.

The following parts of the appliance must be cleaned and dry regularly:

- **drip tray (A8)**: The drip tray is fitted with a level indicator (in red) showing the amount of water it contains. Before the indicator protrudes from the cup grid, the drip tray (A8) must be emptied and cleaned, otherwise the water may overflow the edge and damage the appliance, the surface it rests on or the surrounding area.
  Remove the drip tray, empty the water and clean the drip tray with a cloth, dry and then reassemble the drip tray until you hear a 'click'.
- **cups filter (A15), (A16)**: After using the appliance, always rinse the filters under abundant running water. Extract the perforated filter by pulling the tab and rinse the filters un-

der running water.
Make sure the holes are not blocked. If necessary or once a month, clean with a needle (fig. 11). Wipe dry with a cloth. Reposition the perforated filter in its seat and push fully home.

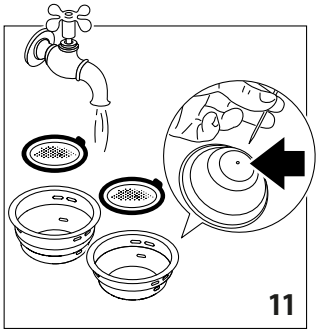

- **brew unit (A7)**: After every 200 coffees, rinse the brew unit by delivering about 0.5 l of water from the brew unit (press the 2 x Espresso icon without using ground coffee).
- **cleaning the water tank (A2)**: Periodically (about once a week) clean the water tank (A2). Also whenever you replace the water softener filter (if present).
  Empty the water tank and clean with warm water (40-50°C approx), wiping if necessary with a clean, non-abrasive cloth. Rinse thoroughly under running water.
  Fill the water tank with fresh potable water up to the MAX level and return it to the machine.
- **hot water/steam wand (A5)**: After every use, remove with a soft damp cloth any milk residues from the hot water/steam wand. Turn the steam knob (A4) to position. The appliance delivers water from the hot water/steam wand.
  Wait that the hot water/steam wand cool down and open the hole of the nozzle with the cleaning needle (A10) (fig. 12).

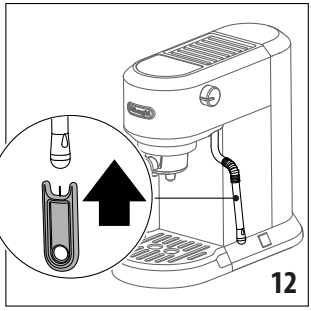

9.1 Switching off for extended periods (more than 3-4 days)

If the machine is not going to be used for any length of time (e.g. holidays, periods of absence) empty out and clean the drip tray and the water tank.

Please note: When turning the machine on again, clean the water tank as described above (see "cleaning the water tank").

Fill the water tank and, before making any kind of drink, run 3 rinse cycles: each time run a short flow of water through the brew unit (A7).

10. DESCALING

Before use, read the instructions and the labelling on the descaler pack.

It is important to use De'Longhi descaler only (available for purchase at delonghi.com). Using unsuitable descaler and/or performing descaling incorrectly may result in faults not covered by the manufacturer's guarantee.

Descaler could damage delicate surfaces. If the product is accidentally spilt, dry immediately.

- Descale the appliance when the (B5) indicator light turns on. Descaling cycle time: about 30 minutes.
- Remove and empy the drip tray (A8), then reposition it in the appliance.
- Empty the water tank (A2) (if present, remove the water softener filter).
- Pour the descaler into the water tank. Add water up to level MAX . Now reposition the water tank in the appliance.
- Make sure the portafilter (A14) is not attached and position a recipient under the hot brew unit (A7) and hot water/steam wand (A5).
- Press and hold the Steam (B2) and 2 x Espresso (B4) icons for 10 seconds.
- Espresso (B3), 2 x Espresso (B4) and Steam (B2) indicator lights blink.
- Press Cold brew icon (B1).
- Turn the steam knob (A4) to position.
- The (B5) and Steam (B2) indicator lights blink.
- The descale programme starts and the descaler liquid comes out of the hot water/steam wand (A5) and brew unit (A7). The descale programme removes limescale deposits from inside the appliance by automatically performing a series of rinses and pauses until the water tank is empty.

Please note: During descaling, to clean the brew unit, close the steam knob from time to time to deliver small quantities of descaler from the coffee outlet.

- Delivery stops and the (B5) and Steam (B2) indicator lights stop blinking; (B5) and Cold brew (B2) indicator lights remain on steadily.

- Rinse and fill the water tank to MAX level with fresh water and empty the recipient used to collect the descaler solution and replace it empty.
- Press Cold brew icon (B1) to start the rinse cycle; (B5) and Cold brew (B2) indicator lights blink.
- When the rinsing process is over, the descaling is complete and the Espresso (B3) and 2 x Espresso (B4) indicator lights blink to indicate that the steam knob must be closed ("○" position).
- Turn the steam knob (A4) to "○" position
- When all the indicator lights on the control panel (except B5) remain on steadily, the appliance is ready for use.

Please note: During rinse cycle to clean the brew unit, close the steam knob from time to time to deliver small quantities of water from the coffee outlet.

11. TECHNICAL DATA

Voltage:	220-240V ~ 50-60Hz.
Absorbed power:	1450W
Max. water tank capacity:	1.1 l
Size LxDxH:	149x330x305 mm
Weight:	4.2 kg

12. EXPLANATION OF INDICATOR LIGHTS

Indicator lights	**Explanation**	
The Espresso (B3), 2 x Espresso (B4) and Steam (B2) indicator lights blink.	The appliance is heating up to make coffee.	
All the indicator lights on the control panel (except B5) remain on steadily.	The appliance is ready to make coffee.	
The Espresso (B3), 2 x Espresso (B4) and Steam (B2) indicator lights blink for 3 seconds.	Fill the water tank (A2) up to level MAX.	
Steam (B2) indicator light blinks.	The appliance is heating up to deliver steam	
Steam (B2) indicator light remain on steadily.	If Steam (B2) icon previously pressed: machine is ready to deliver steam.	Place the jug with fresh cold milk under the hot water/steam wand (A5), turn the steam knob (A4) to position; the appliance proceeds to make the froth (see Par. 4 "Making Milk or plant based milk Beverages").
	If Steam (B2) icon not previously pressed: air in the hydraulic circuit.	Verify water tank position, water filter position and water presence. Check if pre-ground coffee is for espresso coffee makers or reduce the dose in the filter. Place a container under steam wand. Turn the steam knob (A4) to position and wait until delivery from steam wand stops (Espresso (B3), 2 x Espresso (B4) indicator lights blink), then close steam knob to "○" position.
On/Off switch pressed but all leds turned off.	The appliance is in stand-by mode; press any icons.	
The Espresso (B3) and 2 x Espresso (B4) indicator lights blink.	Turn the steam knob (A4) to "○" position.	

13. TROUBLESHOOTING

Problem	Cause	Solution
No espresso coffee is delivered.	No water in the water tank (A2).	Fill the water tank.
	Blockage in the cup filters (A15) or (A16).	Rinse the cup filters under running water; see "Cleaning cups filter".
	The water tank (A2) is not properly in place and the valves at the bottom are not open.	Press down lightly on the tank to open the valves at the bottom.
	Limescale in the water circuit.	Descale the appliance.
	The pre-ground coffee is too fine.	Use only pre-ground coffee for espresso coffee makers or reduce the dose.
The espresso coffee drips from the edges of the portafilter (A14) rather than the spouts.	The portafilter has been inserted incorrectly or is dirty.	Attach the portafilter correctly and rotate firmly as far as it will go.
	The brew unit gasket has lost elasticity or is dirty.	Clean the brew unit gasket. If problem persists, contact Customer Service.
The portafilter (A14) cannot be attached to the appliance.	Too much coffee has been placed in the filter.	Use the spoon (A9) supplied and make sure you are using the correct filter for the type of preparation.
The coffee crema is too light (delivered from the spouts too fast).	The pre-ground coffee is not tamped firmly enough.	Tamp the pre-ground coffee more firmly.
	There is not enough pre-ground coffee.	Increase the quantity of pre-ground coffee.
	The pre-ground coffee is too coarse.	Use only pre-ground coffee for espresso coffee makers.
	The wrong type of pre-ground coffee is being used.	Make sure to use fresh pre-ground coffee grinded for espresso machines.
The coffee crema is too dark (delivered from the spouts too slowly).	There is too much pre-ground coffee in the filter.	Reduce the quantity of pre-ground coffee.
	The espresso brew unit (A7) is blocked.	Clean the brew unit.
	The cup filters (A15) or (A16) are blocked.	Clean the cup filter.
	The pre-ground coffee is too fine.	Use only pre-ground coffee for espresso coffee makers.
After delivering coffee, the filter remains attached to the brew unit.		Insert the portafilter (A14) again, deliver coffee, then remove the portafilter.
The appliance will not make any drink and the Espresso (B3), 2xEspresso (B4) and Steam (B2) indicator lights blink for a few seconds.	No water in the water tank (A2).	Fill the tank with water.
	The water tank (A2) is not properly in place and the valves at the bottom are not open.	Press down lightly on the tank to open the valves at the bottom.
All the indicator lights on the control panel (except B5) blink.	Overtemperature alarm.	Disconnect the appliance immediately and contact authorised Customer Services.
No milk froth is formed when making cappuccino.	Milk not cold enough.	Always use milk at refrigerator temperature.
	Steaming procedure could be wrong .	Review the "making milk beverage" paragraph.
	Hot water/steam wand dirty.	Clean the hot water/steam wand (A5).
The (B5) indicator light turns on.	Descaling is required.	Perform descaling.

Register Now

www.delonghi.com/register

De'Longhi Appliances via Seitz, 47 31100 Treviso Italia delonghi.com

57132C8971 _01_1224